basic education

Department:
Basic Education
REPUBLIC OF SOUTH AFRICA

NATIONAL SENIOR CERTIFICATE

GRADE 12

AGRICULTURAL SCIENCES P2

NOVEMBER 2018

MARKS: 150

TIME: 2½ hours

This question paper consists of 14 pages.

Copyright reserved

INSTRUCTIONS AND INFORMATION

1. This question paper consists of TWO sections, namely SECTION A and SECTION B.

2. Answer ALL the questions in the ANSWER BOOK.

3. Start EACH question on a NEW page.

4. Number the answers correctly according to the numbering system used in this question paper.

5. You may use a non-programmable calculator.

6. Show ALL calculations, including formulae, where applicable.

7. Write neatly and legibly.

SECTION A

QUESTION 1

1.1 Various options are provided as possible answers to the following questions. Choose the answer and write only the letter (A–D) next to the question numbers (1.1.1 to 1.1.10) in the ANSWER BOOK, e.g. 1.1.11 B.

1.1.1 One of the following is an effective tool to evaluate the proposed enterprise and indicates a need for renewal:

A Business plan
B Balance sheet
C Cash flow statement
D SWOT analysis

1.1.2 An agreement between retailers to buy or sell a product at an agreed price:

A Regulated price
B Price-fixing
C Demand fixing
D Supply fixing

1.1.3 ONE of the following is NOT a function of marketing:

A Packaging
B Risk-taking
C Storage
D Processing

1.1.4 The following with regard to an entrepreneur are TRUE:

(i) Able to convince people about an idea
(ii) Knowledgeable, skilled and has contacts
(iii) Gets into a business by mere inheritance
(iv) Identifies and evaluates an opportunity

Choose the CORRECT combination:

A (i), (ii) and (iv)
B (ii), (iii) and (iv)
C (i), (ii) and (iii)
D (i), (iii) and (iv)

1.1.5 If the cost of 100 chickens in a farm budget is R350, then the cost of 20 chickens in that budget will be …

A R700.
B R70.
C R7.
D R35.

1.1.6 One non-productive employee can spoil the whole work environment. In order to increase the productivity of labour the role of management will be:

(i) Setting clear, attainable goals
(ii) Re-evaluating the staff on a regular basis
(iii) Daily supervision
(iv) Sending the employee on a lengthy paid leave

Choose the CORRECT combination:

A (i), (iii) and (iv)
B (ii), (iii) and (iv)
C (i), (ii) and (iv)
D (i), (ii) and (iii)

1.1.7 Long-term credit will be used to buy the following:

A Maize cultivar
B 2 : 3 : 2 (22) fertiliser
C A shearing shed
D An exotic bull

1.1.8 A primary natural resource important for agricultural production:

A Capital
B Management
C Land
D Machinery

1.1.9 The turning back and reunion of a part of a chromosome:

A Inversion
B Deletion
C Doubling
D Translation

1.1.10 An external cause of variation:

A Diseases
B Recombination of genes
C Crossing-over of chromosomes
D Mutation (10 x 2) (20)

1.2 Choose a term/phrase from COLUMN B that matches a description in COLUMN A. Write only the letter (A–H) next to the question numbers (1.2.1 to 1.2.5) in the ANSWER BOOK, e.g. 1.2.6 I.

COLUMN A	COLUMN B
1.2.1 A phenomenon showing how the number of products produced responds to a change in price	A price elasticity of demand
	B credit
1.2.2 A method used to reduce the risk of marketing agricultural products	C outbreeding
	D saving
1.2.3 An internal source of farming capital	E management
1.2.4 An effective combination and coordination of all resources to maximise profit	F price elasticity of supply
	G inbreeding
1.2.5 Produces a homogeneous population of animals	H insurance

(5 x 2) (10)

1.3 Give ONE word/term for EACH of the following descriptions. Write only the word/term next to the question numbers (1.3.1 to 1.3.5) in the ANSWER BOOK.

1.3.1 The approach that divides the market into smaller groups of buyers

1.3.2 An economic characteristic of land whereby an increase in input on land does not bring a proportionate increase in yield

1.3.3 The crossing of organisms where two sets of alleles are involved

1.3.4 A sudden random change in the genetic makeup of an individual

1.3.5 A section in the DNA molecule that determines the inheritance of a particular characteristic (5 x 2) (10)

1.4 Change the UNDERLINED WORD in EACH of the following statements to make it TRUE. Write only the answer next to the question numbers (1.4.1 to 1.4.5) in the ANSWER BOOK.

1.4.1 Selling is the process of transporting goods along the marketing chain.

1.4.2 Analytical skills allow the manager to reflect on changes on the farm and develop strategies to address them.

1.4.3 A homozygous individual possesses different alleles for a particular gene on each homologous chromosome.

1.4.4 Genetics is the passing on of characteristics from one generation to the next generation.

1.4.5 The reappearance of a characteristic after its apparent absence for a few generations is called epistasis. (5 x 1) (5)

TOTAL SECTION A: 45

SECTION B

QUESTION 2: AGRICULTURAL MANAGEMENT AND MARKETING

Start this question on a NEW page.

2.1 The table below shows the price, supply of and demand for lemons over a five-day period.

	DAY 1	DAY 2	DAY 3	DAY 4	DAY 5
Price (in rands)	10	15	20	25	30
Supply	5	10	15	20	25
Demand	25	20	15	10	5

2.1.1 Identify the day when there was market equilibrium. (1)

2.1.2 Refer to the table and explain the relationship between price, supply and demand. (3)

2.1.3 Give a reason why there was a lower demand for lemons on DAY 5 than on DAY 1. (1)

2.2 A farmer sells peaches in different sizes to suit the preferences of consumers. The table below shows how peaches are placed in boxes after harvesting.

SIZE AND APPEARANCE OF PEACHES	CLASS	SIZE OF THE BOX (in mm)	NUMBER OF PEACHES PER BOX
Big, ripe, smooth, no bruises	1	600 x 800	18
Medium, some not ripe, with few bruises	2	600 x 800	24
Small, ripe, mostly bruised	3	600 x 800	30

2.2.1 Name the marketing function referred to in the table above. (1)

2.2.2 State TWO factors used in the grading of the peaches. (2)

2.2.3 Identify the factor that could hamper the marketing of the peaches in the table above. (1)

2.2.4 Briefly describe THREE advantages of processing peaches. (3)

2.3 The channels below are used by producers to market their produce in a free-market system:

A. Sell produce to street vendors directly from the farm
B. Supply fresh produce to the local retailers
C. Secure a contract with a buyer, such as a processing company, for a specified number of years

2.3.1 Name the free-marketing channels **A**, **B** and **C**. (3)

2.3.2 Define a *free-marketing system*. (2)

2.3.3 Give TWO advantages of contractual sales for farmers. (2)

2.3.4 Compare a cooperative marketing system to a free-marketing system with regard to the price of the produce. (2)

2.4 The table below shows the characteristics of two individuals.

INDIVIDUAL A	INDIVIDUAL B
• Works for someone • Trades his/her time for salary • Controlled by fear • Uses a curriculum vitae (CV) to seek employment	• Works for himself/herself • Always looking for new business ventures • Sells a concept • Has a business plan • Has an appetite for risk

2.4.1 Identify the individual (**A** or **B**), in the table above, who represents an entrepreneur. (1)

2.4.2 Identify TWO personal characteristics, in the table above, of an entrepreneur. (2)

2.4.3 Identify the document that will enable the entrepreneur to secure funding from a financial institution. (1)

2.4.4 State TWO problems the entrepreneur usually encounters when drawing up the document in QUESTION 2.4.3. (2)

2.5 The table below shows agricultural products and their prices in 2016 and 2017.

PRODUCT	PRICE (R) 2016	PRICE (R) 2017
Yellow maize (R/ton)	4 050	2 750
Wheat (R/ton)	4 200	4 450
Beef (c/kg)	3 500	6 200
Soya beans (R/ton)	4 500	4 700
Lamb (c/kg)	3 700	9 200
White maize (R/ton)	4 100	3 700

2.5.1 Draw a bar graph to compare the prices of plant products in 2016 with plant products in 2017. (6)

2.5.2 Indicate the trend of maize and red meat prices from 2016 to 2017. (2)
[35]

QUESTION 3: PRODUCTION FACTORS

Start this question on a NEW page.

3.1 The pictures below show the functions of land as a production factor.

PICTURE A	**PICTURE B**

3.1.1 State the economic functions of land associated with PICTURE A and PICTURE B. (2)

3.1.2 Name ONE method that could be applied in PICTURE A that farmers could use to benefit the human population in PICTURE B. (1)

3.1.3 State an economic benefit of land for a farmer trying to source finances from a financial institution. (1)

3.2 Name the economic characteristics of land represented by EACH of the statements below:

3.2.1 Land is needed to build more houses due to an increase in the human population in the last few years. (1)

3.2.2 The farmer has lived and produced on this farm for 50 years. (1)

3.2.3 In 1952 the farmer's parent bought a 500 ha farm for R700 and now the value of the farm is R8 350 000. (1)

3.3 Farm labour is a crucial factor of production.

3.3.1 Name the type of temporary farm worker that is employed for non-repetitive tasks. (1)

3.3.2 State TWO characteristics of a permanent farm worker. (2)

3.4 Farms are found mostly in areas outside towns far from recreation, health and educational facilities. Normally farm workers earn lower wages.

The following happens on farms:

- Alcohol abuse after working in harsh conditions for long hours
- Low levels of education for both parents and children
- Low social values resulting in high HIV/Aids infections

3.4.1 Identify TWO challenges that will affect labour productivity in the above scenario. (2)

3.4.2 State TWO responsibilities of the farmer to address the challenges identified in QUESTION 3.4.1. (2)

3.4.3 Refer to the scenario above and give TWO reasons why farms lose workers to other industries. (2)

3.5 A farmer started a poultry business venture with a bank loan of R100 000, payable at a rate of 20%, over a period of 5 years. The eggs were graded according to small and large sizes. The large eggs were sold to a chain store. The smaller eggs were given to the farm workers.

3.5.1 Identify TWO sources of capital that can be used to expand the egg-producing enterprise in the scenario above. (2)

3.5.2 Identify TWO problems with capital in the scenario above. (2)

3.5.3 Name TWO other problems associated with capital, besides those identified in QUESTION 3.5.2. (2)

3.5.4 Use a formula to calculate the profit per month from egg sales, if the income is R14,85 per dozen and the expenditure is R8,55 per dozen. (Show ALL calculations.) (3)

3.6 The table below shows the different farming enterprises on a farm.

ENTERPRISE	FARM PRODUCT	MARKETS
Cash crop production	Vegetables	Contract with a supermarket
Livestock production	Pork and eggs	Butcheries and hostels
Fodder crop production	Hay	Race-horse industry

3.6.1 Name TWO risk management strategies in the table above. (2)

3.6.2 Refer to the strategies identified in QUESTION 3.6.1 and justify EACH strategy. (2)

3.7 The farming business is influenced by both internal and external forces.

3.7.1 Name the external force represented by EACH of the statements below:

(a) The increase of VAT on commodities (1)

(b) The outbreak of listeriosis that led to food contamination (1)

(c) New emerging markets for the same product (1)

(d) Today's youth believe in fast foods, whilst parents are part of the staple diet group (1)

3.7.2 Give the sources of risk linked to QUESTION 3.7.1(a) and QUESTION 3.7.1(b). (2)

[35]

QUESTION 4: BASIC AGRICULTURAL GENETICS

Start this question on a NEW page.

4.1 The table below shows the results of a pure-bred milk goat population with white coats (WW) crossed with goats with brown coats (ww). The offspring of the F_1 generation was used as the four pairs of parents for the F_2 generation.

	NUMBER OF WHITE GOATS	NUMBER OF BROWN GOATS
PARENTS	1	1
F_1 generation	8	0
F_2 generation		
Offspring of the 1st parents	8	0
Offspring of the 2nd parents	7	1
Offspring of the 3rd parents	5	3
Offspring of the 4th parents	4	4

4.1.1 Identify the number of brown goats in the F_1 generation. (1)

4.1.2 Determine the phenotypic ratio of the offspring of the F_2 generation for all the parents. (2)

4.1.3 Use the Punnet square to determine the genotypic ratio in the F_2 generation. (4)

4.2 The flow chart below is a schematic representation of different breeding systems.

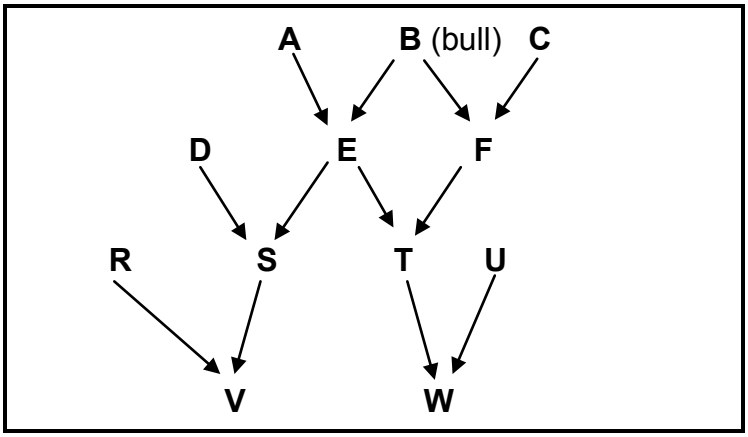

4.2.1 Refer to the flow chart above and identify the breeding systems represented by EACH of the following:

(a) **A** x **B** (1)
(b) **E** x **F** (1)
(c) **V** x **W** (1)

4.2.2 Name TWO characteristics of progeny **E**. (2)

4.2.3 State TWO disadvantages of the breeding system producing progeny **T**. (2)

4.3 A recent development in the improvement of plants and animals through genetic modification resulted in more resistance to pests and diseases. Certain techniques, such as the ones listed below, are used to change the genes in the DNA of plants and animals:

(a) Electric current is used to insert the desired gene.
(b) Use a small syringe and a needle to transfer the desired gene into the nucleus.
(c) The vector transfers the desired gene.

4.3.1 Identify techniques (a), (b) and (c). (3)

4.3.2 State THREE potential benefits of genetically modified crops. (3)

4.3.3 Name TWO negative effects of genetically modified crops on the environment. (2)

4.4 Variation forms the basis of selection for breeding. A farmer specialising in poultry, selected chickens with different head combs and body sizes caused by either internal or external factors.

4.4.1 Identify TWO types of variation in the statement above. (2)

4.4.2 Differentiate between the two types of variation in QUESTION 4.4.1. (2)

4.4.3 Indicate the characteristic of the chickens in the scenario above that is:

(a) Influenced solely by genes (1)

(b) Affected by the environment (1)

4.4.4 Give another external factor that could have an impact on the characteristic in QUESTION 4.4.3(b). (1)

4.5 The statements below show different patterns of inheritance:

(a) An animal with a phenotype that is between the phenotype of both parents
(b) Both black and red colours are visible on the coat of an animal
(c) The animal has a brown coat like the parent

4.5.1 Match statements (a), (b) and (c) with the types of dominance. (3)

4.5.2 Identify the genetic phenomenon of inheritance in QUESTION 4.5(c). (1)

4.5.3 State TWO patterns of inheritance, other than those identified in QUESTION 4.5.1(a) to (c). (2)

[35]

TOTAL SECTION B: 105
GRAND TOTAL: 150

Copyright reserved